Discoh Ceiling



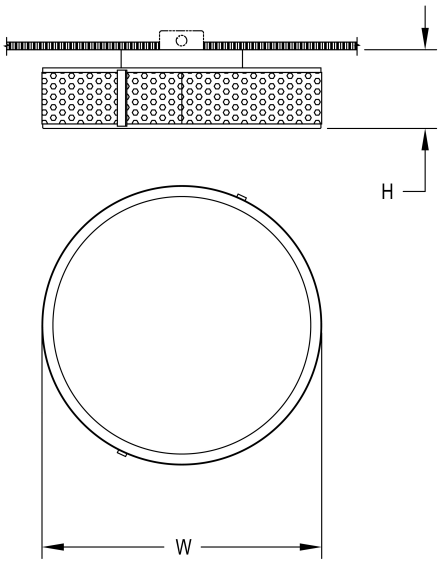

Notes

- FINISH: Finish is low VOC thermo-cure powdercoat paint or clear lacquer. Specify three digit color suffix with "PT" finish options.
- HOUSING: Consists of spun aluminum housing clad with stainless steel or aluminum textured metal trim. Opal white acrylic diffuser.
- MOUNTING: Fixture mounts to a standard octagonal junction box.
- ETL listed to UL standards for dry and damp locations
- *Surge protection recommended for use with D1 (Triac/Leading Edge) dimming systems.

1 Fixture Number

DC-890 6.5"H x 23.5" Dia.

2 Finish

Housing

Standard Painted Finishes (PT)

Brushed Solid Aluminum (BA)

Textured metal accent trim

Standard Painted Finishes (PT)

Stainless Steel (SS)

3 Lamping

All LED options include integral 120-277v 1-100% dimming drivers compatible with 0-10v, Triac, and ELV controls. Over-current and short-circuit protected. All LEDs are 80+ CRI, 50,000 hr. L70. Wattage listed includes driver efficiency.

DC-890

LED Options	Lumens	Wattage
C26	2178 (delivered)	26
C38	3118 (delivered)	38

4 LED Color Temp

27: 2700K

30: 3000K

35: 3500K

40: 4000K

5 LED Dimming

D0: 0-10v

D1: Triac (Leading Edge)*

D2: ELV (Trailing Edge)

6 Voltage Options

120: 120 volt

277: 277 volt (Not available with incandescent lamp options)

7 Diffuser Options

WH: White Acrylic

8 Panel Options

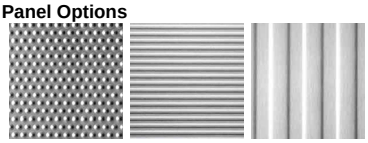

DOT HRB VRB

1	2	2	3	4	5	6	7	8
Fixture #	Housing (Finish)	Textured metal (Finish)	Lamping	Color Temp	Dimming	Voltage	Diffuser	Panel

©2018 Manning Lighting Inc. Sheboygan, WI 53083 Phone: 920-458-2184 Web: manningltg.com Email: info@manningltg.com Design modification rights reserved. Made in USA.